# EU DECLARATION OF CONFORMITY

| | |
|---|---|
| Product | HRV1.25 *Q Plus* EcoAura |
| Part Number | TP416B-FAD-LH |
| Manufacturer | Titon Hardware Limited |
| Address | 894 The Crescent, Colchester Business Park, Colchester, Essex, CO4 9YQ, UK. |

This declaration of conformity is issued under the sole responsibility of the manufacturer.

Product Type: Mechanical Heat Recovery Ventilation Unit

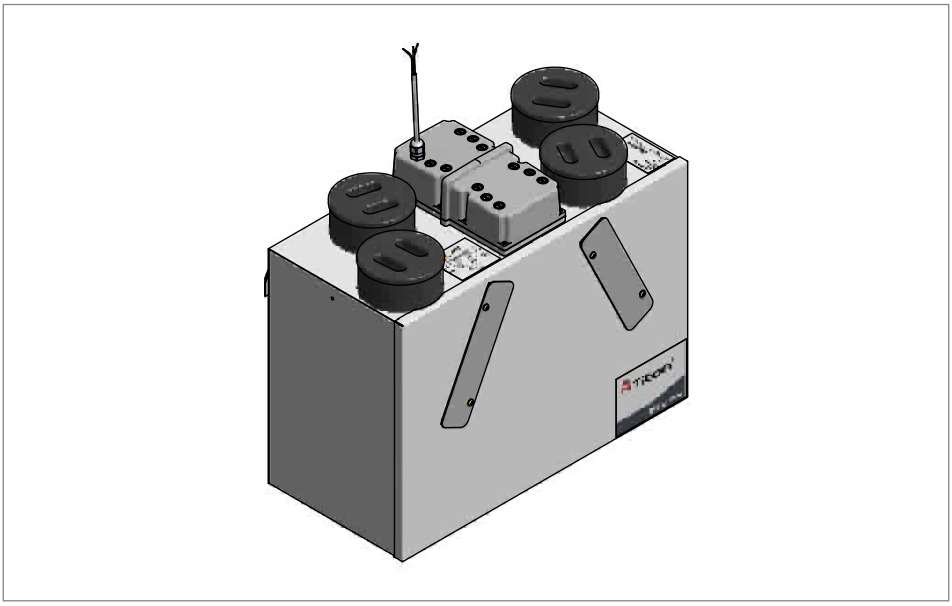

This object of the declaration described above is in conformity with the relevant legislation:

| Harmonised Legislation: | Harmonised Standards: |
|---|---|
| 1253/2014 Ecodesign | BS EN 13141-6 |
| 1254/2014 Energy Labelling | BS EN 55014-1 |
| 2014/35/EU Low Voltage | BS EN 55014-2 |
| 2014/30/EU Electromagnetic Compatibility | BS EN 60335-1 |
| 2012/19/EU Waste Electrical and Electronic Equipment | BS EN 60335-2-80 |
| 2011/65/EU RoHS | BS EN 61000-3-2 |
| | BS EN 61000-3-3 |
| | BS EN IEC 63000 |

Signed for and on the behalf of: Titon Hardware Limited
894 The Crescent, Colchester Business Park, Colchester, Essex, CO4 9YQ, UK.

Date: 16th December 2022

| | | |
|---|---|---|
| Alexandra French | Paul Tarling | Paul S Cowell BEng (Hons) CEng MCIBSE |
| Chief Executive | Operations Director | Technical Director |