Product Manual

EN

Titon Ultimate® dMEV

Decentralised Ventilation Unit

Titon Ultimate® dMEV H

Decentralised Ventilation Unit with Humidity Control

Titon Ultimate® dMEV HD

Decentralised Ventilation Unit with Humidity Control & Data Logging

Titon®
ventilation systems

Warnings, Safety and Guidance

Important Information

Read these instructions fully before the installation of this appliance

1. Installation of the appliance and accessories must be carried out by a qualified and suitably competent person and be carried out in clean, dry conditions where dust and humidity are at minimal levels.
2. All wiring must conform to current I.E.E. Wiring Regulations and all applicable standards and Building Regulations.
3. Units are suitable for 220-240V~ 50-60Hz single phase.
4. If the PSU supply cord is damaged, it must be replaced by the manufacturer, its service agent or similarly qualified persons in order to avoid a hazard.
5. Stationary appliances not fitted with means for disconnection from the supply mains having a contact separation in all poles that provide full disconnection under over voltage category III, the instructions state that means for disconnection must be incorporated in the fixed wiring in accordance with the wiring rules.
6. If supply is a 6 amp lighting circuit a local fuse is not required.
7. If supply is not via a 6 amp lighting circuit, a localised 3 amp fuse must be used.
8. The unit must be stored in a clean and dry environment.
9. Ensure that external grilles are located away from any flue outlet, in accordance with relevant Building Regulations.

10. The terminal marked with the earth symbol is for parking only and non-functional. As the fan is a class II appliance no connection to earth is required.Do not install the appliance in areas where the following may be present or occur;
    - Excessive oil or a grease laden atmosphere,
    - Corrosive or flammable gases, liquids or vapours,
    - Ambient temperatures above 40°C or below -5°C,
    - Humidity levels above 90% or is a wet environment.
11. This appliance can be used by children aged from 8 years and above and persons with reduced physical, sensory or mental capabilities or lack of experience and knowledge if they have been given supervision or instruction concerning use of the appliance in a safe way and understand the hazards involved.
12. Children should be supervised to ensure that they do not play with the appliance.
13. Precautions must be taken to avoid the back-flow of gases into the room from the open flue of gas or other fuel-burning appliances
14. Ensure all ducting is free from debris and blockages before switching on the unit.
15. Horizontal ducts should be arranged to slope slightly downwards away from the fan.
16. Ensure there is adequate access for commissioning and optimal unit operation.
17. Ensure adequate air return into the room in compliance with existing regulations in order to ensure proper device operation.
18. Cleaning and user maintenance shall not be made by children without supervision.

Contents

When this document is viewed as a PDF the headings & sub headings on this page are hyper-links to the content pages. Additionally the page numbers in this document are hyper links back to the contents page.

Explanation of symbols on the appliance

Symbol	Definition
	Read instruction Manual.
	Risk of Electric Shock.
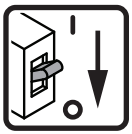	Disconnect the mains supply before removing this cover.

Product Overview

This manual is for the range of Titon Ultimate ® dMEV Decentralised Extract ventilation units. These units are designed for continuous extract ventilation of a single room, for example, a bathroom, kitchen, toilet, or utility area.
In addition to this, they can be used as Intermittent Extract Ventilation units. These units use an efficient DC motor and a bespoke impeller/guide vane combination to produce high flow rates and pressure. The internal controller self-commissions the unit to the required flow rates in both wall and ceiling mounted installations and reacts to increased external pressure to maintain the air flow rate. The range of products in this line includes:

Titon Ultimate® dMEV Decentralised Ventilation Unit			
Part Number	Humidity	Data Logging	SELV
TP640i			
TP642i			o
TP640Hi	o		
TP642Hi	o		o
TP640HDi	o	o	
TP642HDi	o	o	o

Package Contents

- dMEV Unit.
- Fixing Pack x1 (Wall Plugs x4 & Screws x4)
- Product Manual.
- SELV units include a PSU Part Number SP642

All shortages or damage must be immediately reported to the supplier.

Accessories(not supplied)

TP645/BR .....Telescopic Wall Kit (Brown)
TP645/BE .....Telescopic Wall Kit (Beige)
TP645/TC .....Telescopic Wall Kit (Terracotta)
TP645/WH .....Telescopic Wall Kit (White)
TP646.....IPx4 Ceiling Kit
TP647.....Decorative Frame
8960102 .....Louvre Grille (Brown)
8960103 .....Louvre Grille (Beige)
8960104 .....Louvre Grille (Terracotta)
8960105 .....Louvre Grille (White)

Dimensions

These diagrams detail the overall size of the unit(s)

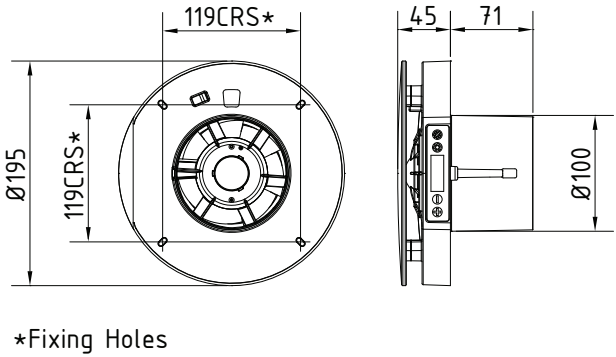

dMEV Fan

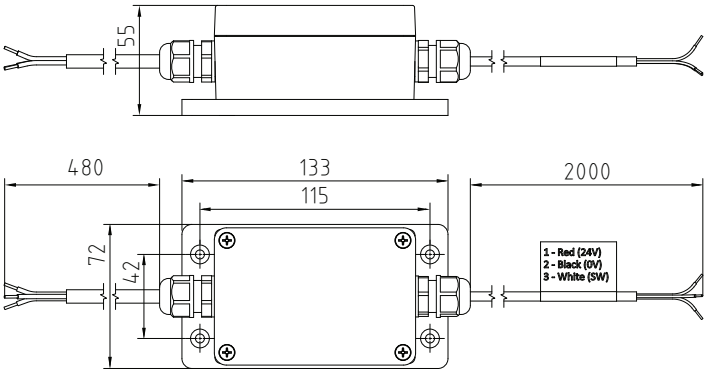

Titon SELV SP642 Power Supply Unit (PSU)

If the PSU supply cord is damaged, it must be replaced by the manufacturer, its service agent or similarly.

Patent applied for APPLICATION NUMBER 2004732.0

Component Identification

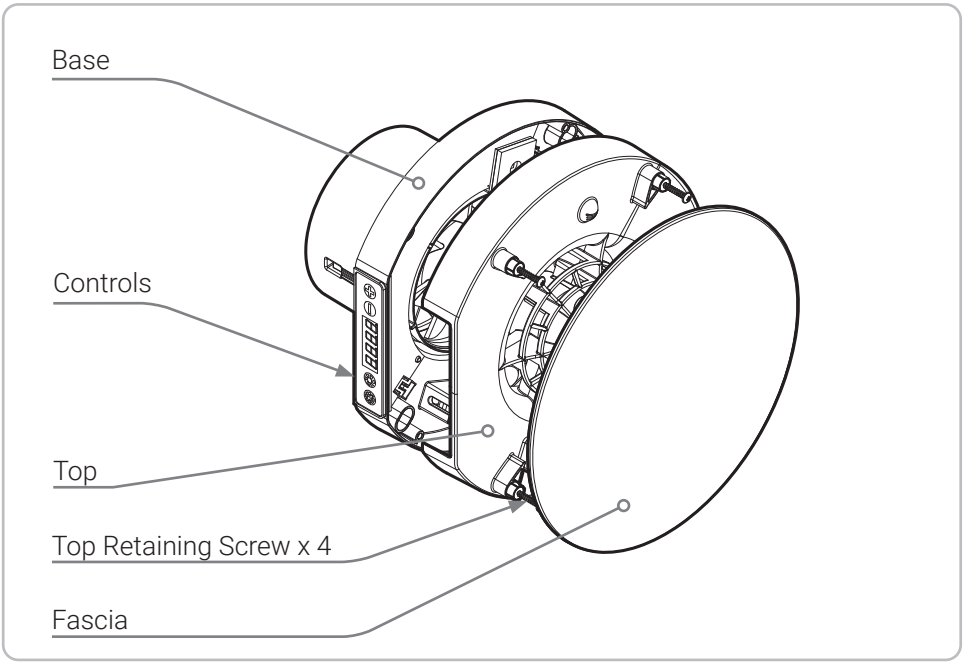

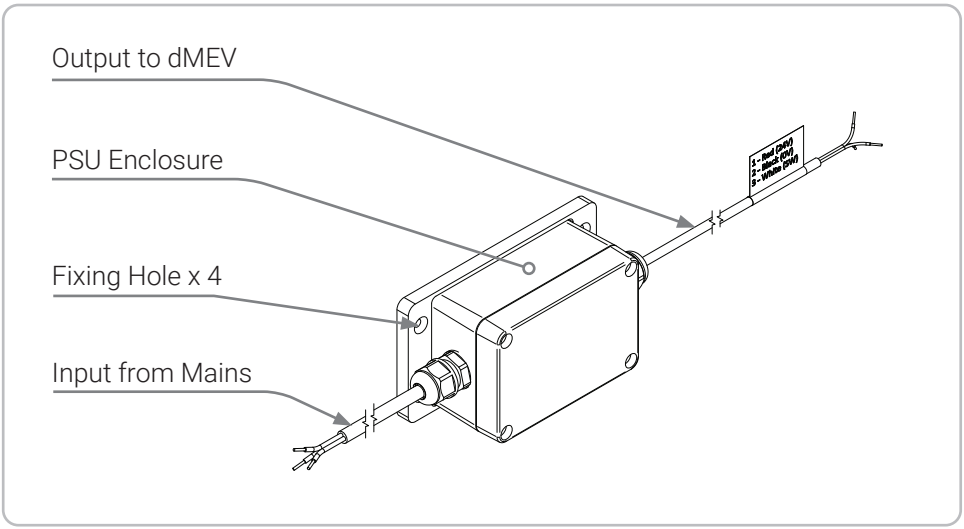

Product Features

Constant Flow

The units are fitted with an integrated Flow Sensor. This continuously monitors the air flow through the unit. If the sensor detects a reduction in air flow, the fan speed will be increased to maintain the required flow rate.

Flow Rate Display

During setup the unit can be configured to display either l/s or m^3/hr.

Continuous/Intermittent Operation

During setup the unit can be switched from Continuous (Default) to Intermittent operation. Unlike Continuous Operation where the fan runs constantly; during Intermittent Operation the fan does not run unless the boost switch is operated, the Humidity Control is functioning or when Speeds 2 or 3 are selected using the control panel.

Continuous Speed

The normal running speed of the unit.

Boost Speed

Boost Speed is an increased speed providing higher extract air flow.

High Boost Speed

Maximum running speed to rapidly remove humidity & VOC's in the dwelling.

Boost Switching

The Boost Speed can be enabled via a switch live input wired into the lighting circuit or independent switch. A second OFF/ON cycle of this switch live input within 5 seconds switches the fan to High Boost.

Boost/High Boost Overrun Timer

A timer that controls the length of time the fan remains in Boost/High Boost Speed after the boost switch has been released.

Boost Delay

A programmable timer which can be used to delay the fan running at Boost/High Boost Speed after a boost switch has been activated.

Humidity Control

Units supplied with Humidity Control continuously monitor the relative humidity (RH) of the extracted air; fan speed increases proportionally between Continuous Speed & Boost Speed.

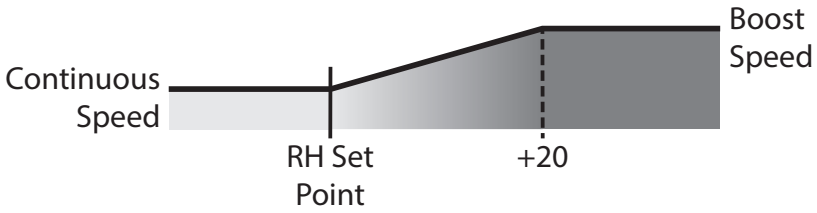

Humidity Control's set point is variable between 30 & 90%RH. Humidity Control will not increase the fan speed above 16l/s (58m³/hr).

Humidity Control Suspend

Humidity Control can be temporarily suspended for a user selected time period.

Data Logging

HDi units record the length of time they have been in powered use and the average humidity on a Daily/Monthly/Annual basis. The results can be recalled via the unit's digital display.

Calibration

The unit is tested and tuned by UKAS calibrated equipment during manufacture. The details of the equipment and certification can be found on the inside of the fan.

Button Lock

The unit has the option to lock the control buttons (Fan Speed & Adjust) to prevent end user interaction with the fan

Product Fiche

Item	TP640i			TP640Hi / TP640HDi			TP642i SELV			TP642Hi / TP642HDi SELV		
Specific Energy Consumption Class (Cold, Average, Warm)	C	A	W	C	A	W	C	A	W	C	A	W
	B	E	F	A+	B	E	A+	B	E	A+	B	E
Declared Typology	Uni Directional			Uni Directional			Uni Directional			Uni Directional		
Type Of Drive Installed	Variable Speed Drive			Variable Speed Drive			Variable Speed Drive			Variable Speed Drive		
Type Of Heat Recovery System	None			None			None			None		
Thermal efficiency of heat recovery [%]	0			0			0			0		
Maximum flow rate [m³/h]	72			72			72			72		
Effective Power Input [W]	2.7			2.7			2.7			2.7		
Sound Power Level [dB]	49			49			49			49		
Reference Flow Rate [m³/s]	0.0147			0.0147			0.0147			0.0147		
Reference Pressure Difference [Pa]	10			10			10			10		
SPI [W/(m³/h)]	0.0518			0.0518			0.0518			0.0518		
Ventilation Control Factor	1.00			0.65			1.00			0.65		
Declared Maximum Internal Leakage Rate [%]	0			0			0			0		
Declared Maximum External Leakage Rate [%]	3			3			3			3		
Mixing Rate of Non-Ducted BVU	NA			NA			NA			NA		
Visual Filter Warning Position	NA			NA			NA			NA		
Unidirectional Installation Requirements	Regulated supply/exhaust grilles (for example, background ventilators) must be installed in the façade for natural air supply/extraction.											
Pre/dis-assembly instructions	www.titon.co.uk											
Non-Ducted Units Airflow Sensitivity to Pressure Variations [%]	+20Pa	-20Pa		+20Pa	-20Pa		+20Pa	-20Pa		+20Pa	-20Pa	
	6%	6%		6%	6%		6%	6%		6%	6%	
Non-Ducted Units Indoor / Outdoor Air Tightness [m³/h]	NA			NA			NA			NA		
SEC Specific Energy Consumption [kWh/(m².a)] (Cold, Average, Warm)	C	A	W	C	A	W	C	A	W	C	A	W
	-31.9	-15.5	-6.1	-54.7	-27.6	-12.1	-31.9	-15.5	-6.1	-54.7	-27.6	-12.1
AEC Annual Electricity Consumption [kWh/a]	0.6	0.6	0.6	0.3	0.3	0.3	0.6	0.6	0.6	0.3	0.3	0.3
AHS Annual Heating Saved [kWh]	33.6	17.2	7.8	55.4	28.3	12.8	33.6	17.2	7.8	55.4	28.3	12.8

Installation

Fixing

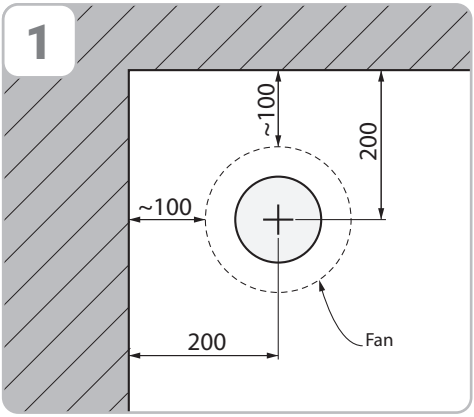

Centre of Hole for fan must be positioned a minimum of 200mm away from any adjacent wall/ceiling.

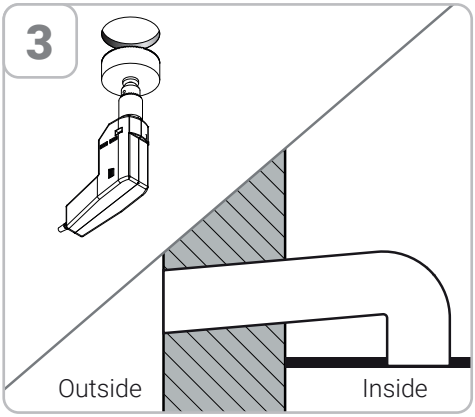

Hole in ceiling (ø105mm) with ducting, slope ducting away from fan to Outside

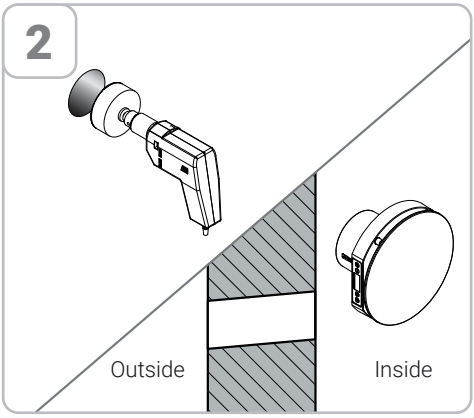

Hole in wall (ø117mm). Slope away from fan to Outside. Make provision for cable.

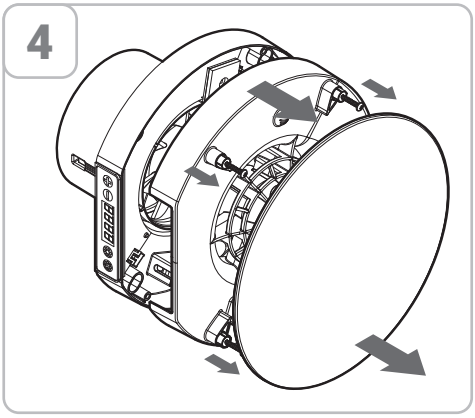

Removal of fascia, loosen retaining fixings & top section.

Fill in any gaps with mortar or expanding foam and make good. Ensure that ducting retains its original shape

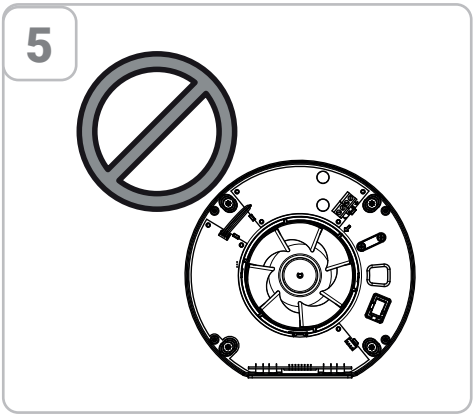

When wall mounted, do not fit fan with display at the bottom of the unit.

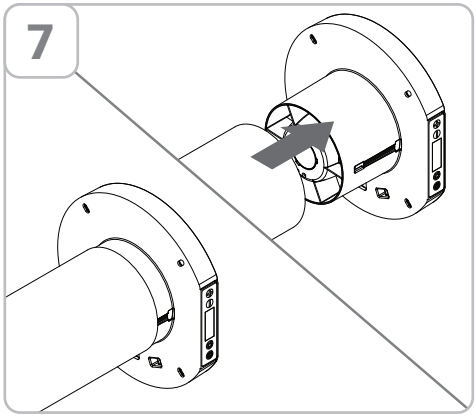

Attach ducting as required.

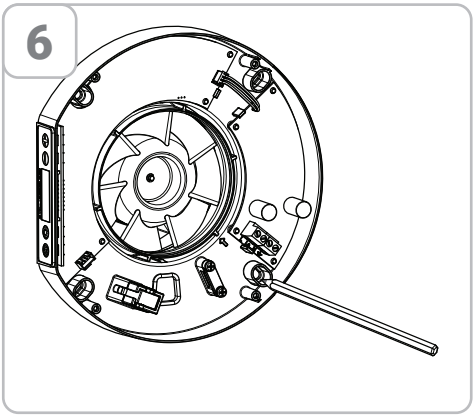

Mark up fixing holes and cable entry.

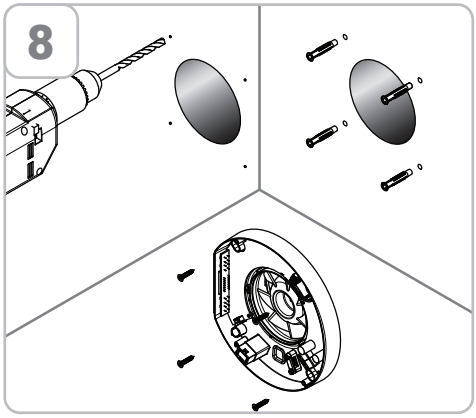

Drill, plug and screw into position. See Dimensions for fixing centres.

9

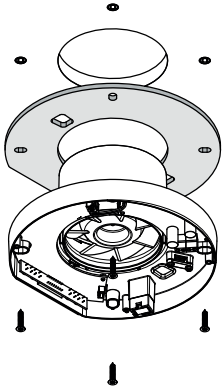

When fan is fitted to a ceiling, TP646 IPx4 Ceiling Kit (not supplied) must be used.

11

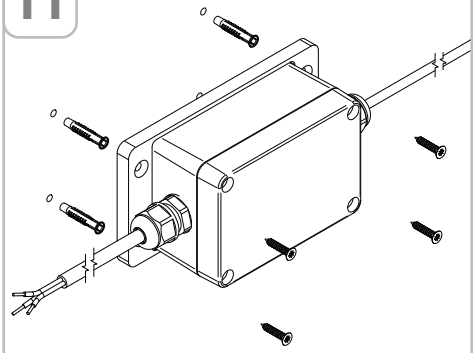

Fix the power supply unit (PSU) box, if installing a SELV fan unit.).

10

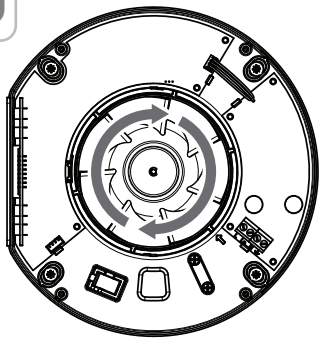

Ensure impeller rotates freely..

12 Complete the wiring using the instructions specific to the dMEV variant that is being installed; Mains or SELV.

13

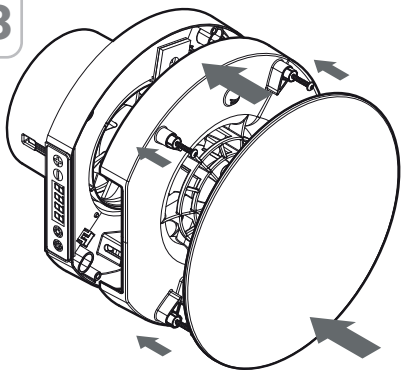

Replace top section, tighten fixings and replace fascia

Mains Wiring TP640

The supply connection to the unit is via a PCB mains terminal block. This is accessed by loosening the retaining screws (x4) and removing the Top of the unit. When connections have been made then the unit cable clamp must be used to firmly hold the cable in position.

When supplied from a 6 amp lighting circuit no local fuse is required. If electricity is not supplied via the lighting circuit, a localised 3 amp fuse must be used.

The terminal marked with the earth symbol is for parking only and non-functional. As the fan is a class II appliance no connection to earth is required.

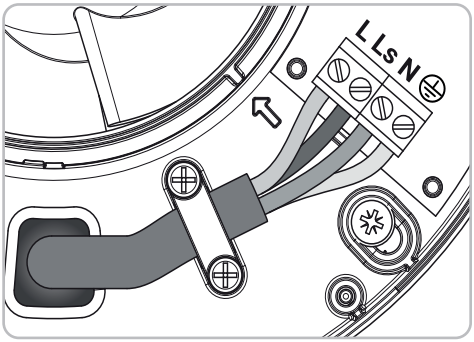

Supply Wiring Cable Clamp

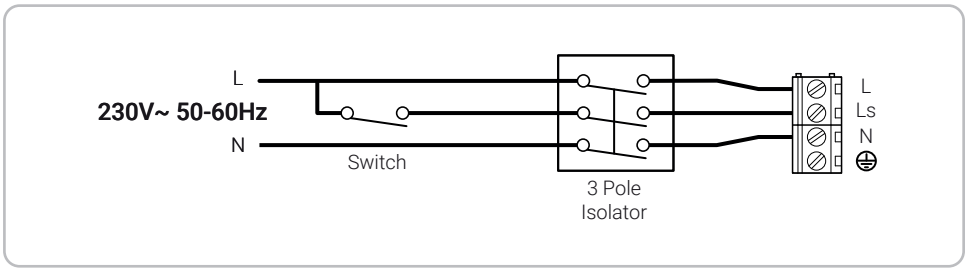

Supply Power & Boost Switching via Independent Live Switching

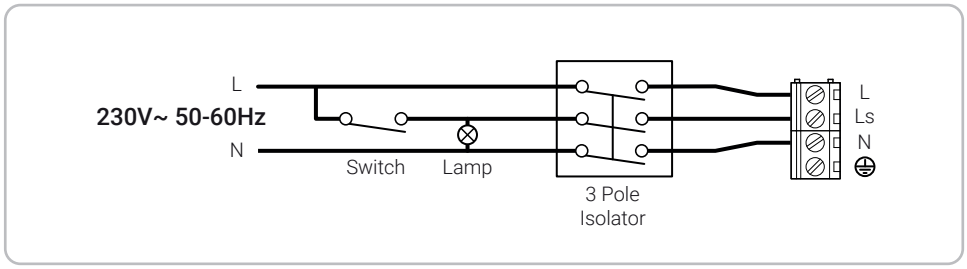

Supply Power & Boost Switching via Lighting Circuit Live Switching

SELV Wiring TP642

The SELV versions are supplied with a separate Power Supply Unit (PSU) SP642. Mains 230V~ is connected to the PSU; with a 24V⎓ connection between the PSU & Fan Unit.

When connections have been made:
Fan Unit - Use the cable clamp to firmly hold the cable.
PSU - Ensure the cable glands are tight and firmly hold the cables.

When supplied from a 6 amp lighting circuit no local fuse is required. If electricity is not supplied via the lighting circuit, a localised 3 amp fuse must be used.

The Titon Ultimate® dMEV SELV must only be used with the Titon SELV PSU part Number SP642.

If the PSU supply cord is damaged, it must be replaced by the manufacturer, its service agent or similarly qualified persons in order to avoid a hazard

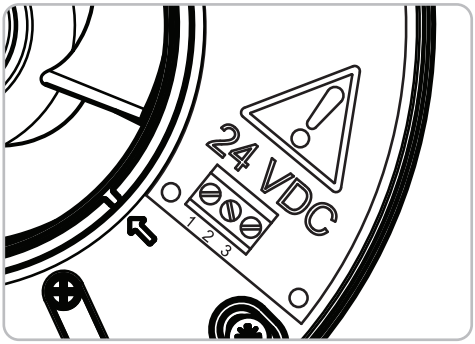

SELV Fan Unit Terminal Block

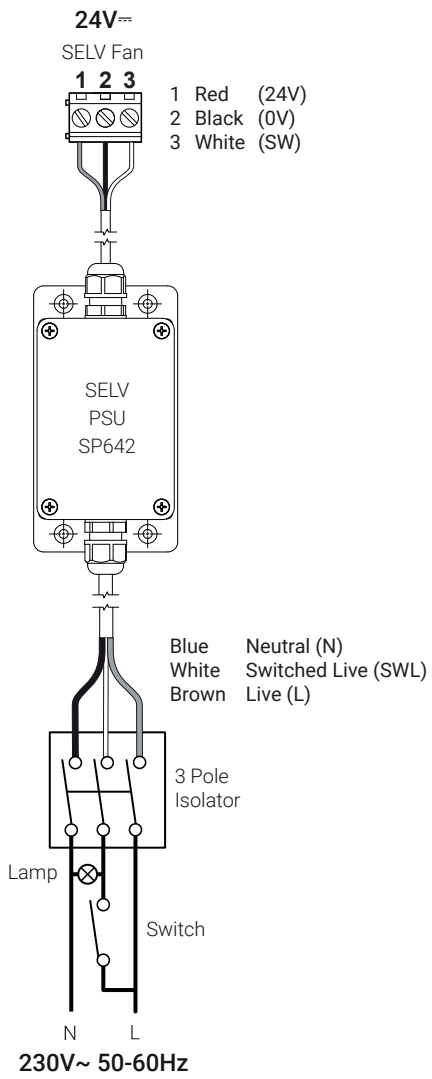

Supply Power & Boost Switching via Lighting Circuit Live Switching

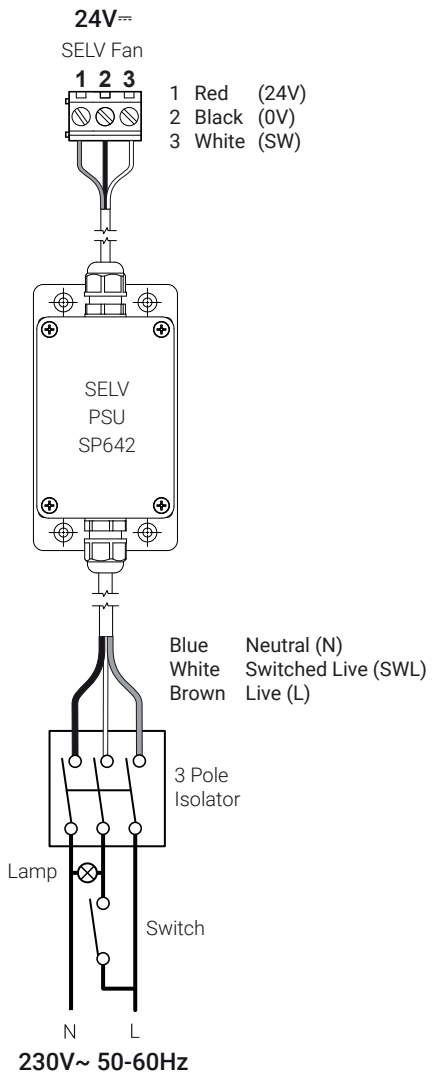

Supply Power & Boost Switching via Independent Live Switching

Commissioning

Fascia must be fitted prior to commissioning or operating fan.

Control Panel

The unit commissioning and operation is made via the control panel. The panel consists of 4 buttons; Settings, Fan Speed and Plus/Minus adjustment buttons. The panel also has a 4 digit display which is visible when buttons are activated or to show an error present with the unit.

Button Lock

The unit has the option to lock the control buttons (Fan Speed & Adjust) to prevent end user interaction with the fan. The lock is activated in the Setup or Timers/Humidity menus. When the buttons are locked, pressing the button will display the option to enter a passcode to unlock the buttons. Once the buttons are unlocked they remain active until they are re-locked in either the Setup or Timers/Humidity menus

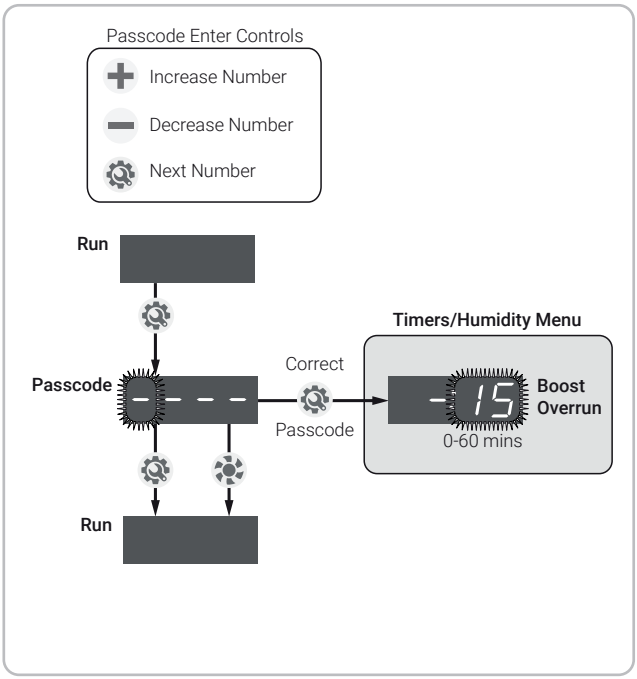

Button Lock disable menu

Setup Continuous Operation

The unit Continuous, Boost and High Boost set values can be adjusted via the control panel. It is not possible to set Speed 1 & Speed 2 to the same value. The unit also has a function to fine tune these flow rates when commissioning with the use of a cone anemometer. When a preset flow rate has been chosen, the fan speed can then be incrementally increased or decreased to achieve the exact flow rate required.

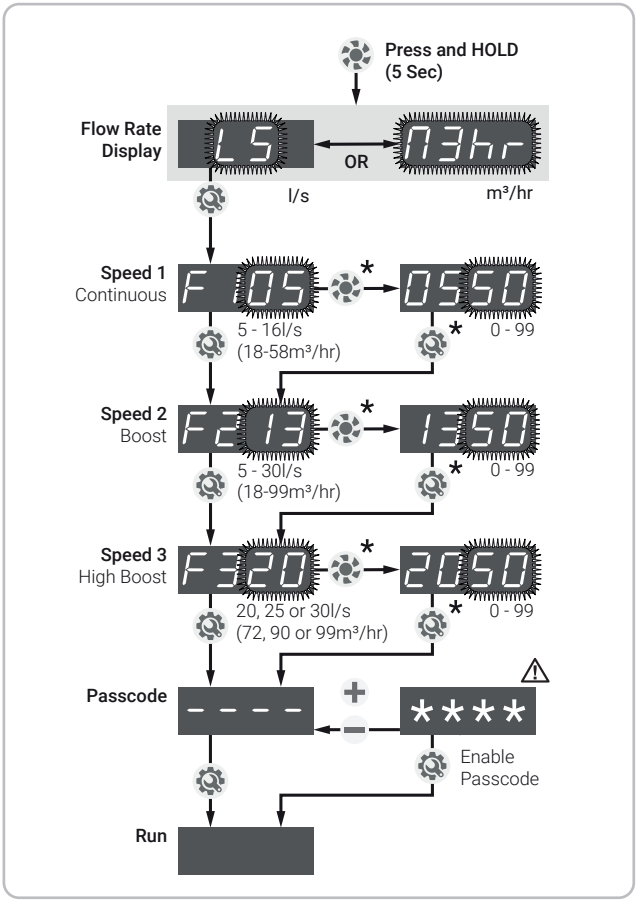

⚠ The passcode is shown here, make note of it for your own use, if you are intending to enable the Button Lock. Only share the passcode with users that are authorised to have full control of the unit.

Unit self calibrating

* During adjustment the fan will self calibrate, while the unit is calibrating four decimal points will be displayed and the indicated buttons will be deactivated.

Setup Intermittent Operation

The unit can set to operate as an intermittent fan; Intermittent and Boost fan speeds values can be adjusted via the control panel. The unit also has a function to fine tune these flow rates when commissioning with the use of a cone anemometer. When a preset flow rate has been chosen, the fan speed can then be incrementally increased or decreased to achieve the exact flow rate required.

.

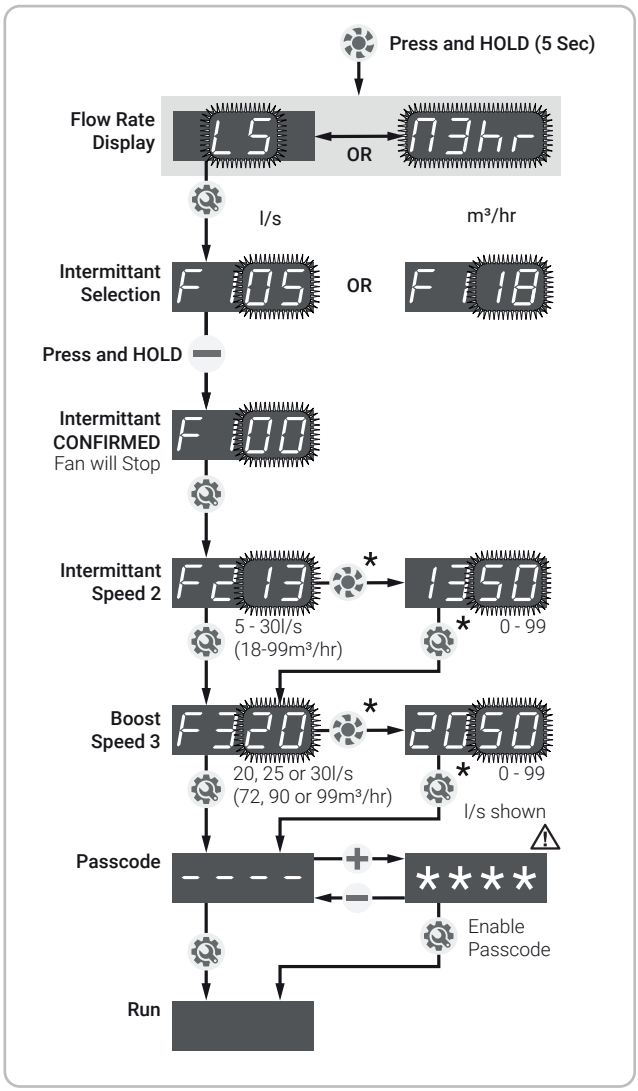

⚠ The passcode is shown here, make note of it for your own use, if you are intending to enable the Button Lock. Only share the passcode with users that are authorised to have full control of the unit.

Timers/Humidity

The unit Boost Overrun Timer, Boost Delay Timer, and Humidity Threshold settings are adjusted using the buttons on the control panel.

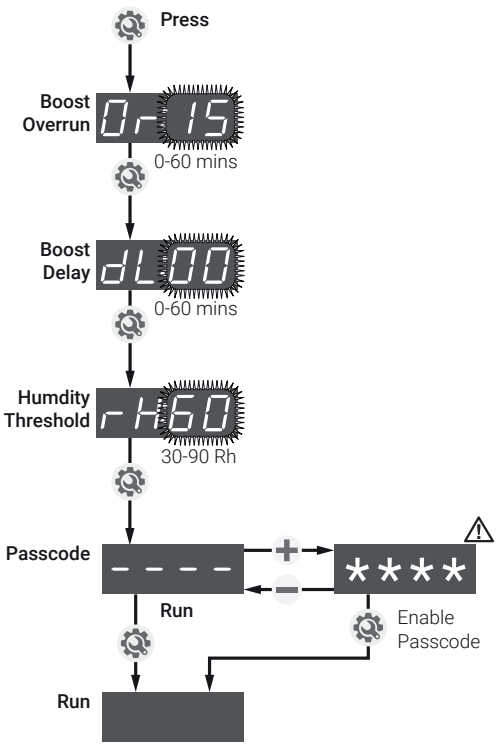

⚠ The passcode is shown here, make note of it for your own use, if you are intending to enable the Button Lock. Only share the passcode with users that are authorised to have full control of the unit.

If a Wifi module has been fitted the Timers/Humidity settings will have additional steps, please refer to the Instructions included with the WiFi module.

Operation

Fascia must be fitted prior to commissioning or operating fan.

Manual Speed Control

When unit is in operation the fan speed can be manually changed. With either a remote Live Switch or the buttons on the fan.

Operation of the Live Switch will activate Boost. A second OFF/ ON cycle of the switch within 5 seconds switches the fan to High Boost.

Alternatively the buttons on the fan can be pressed as illustrated.

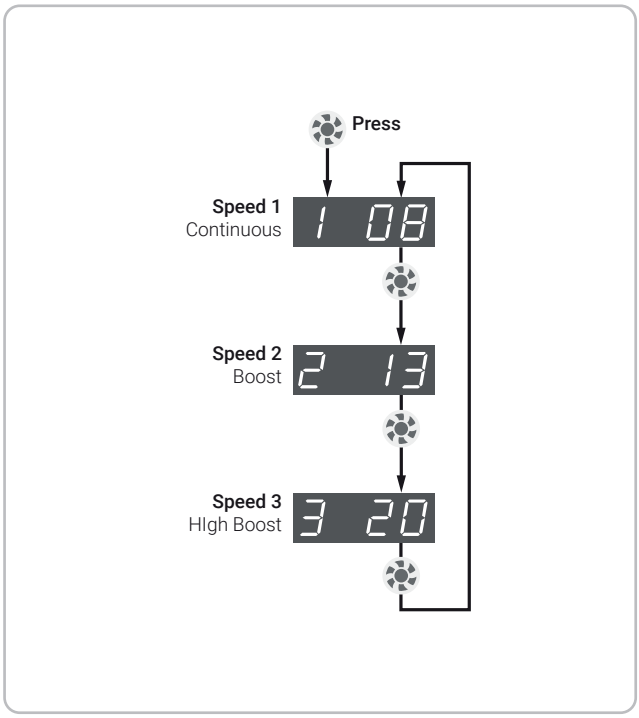

When the unit is manually put into Boost or High Boost the unit will run for 60 minutes then return to Continuous. If an independent Boost switch is being used and is on, then High Boost will return to Boost after the 60 minutes.

Display Logged Data

The HD units record the length of time it has been in powered use and the average humidity on a Daily/Monthly/Annual basis. This menu is used to display the recorded data.

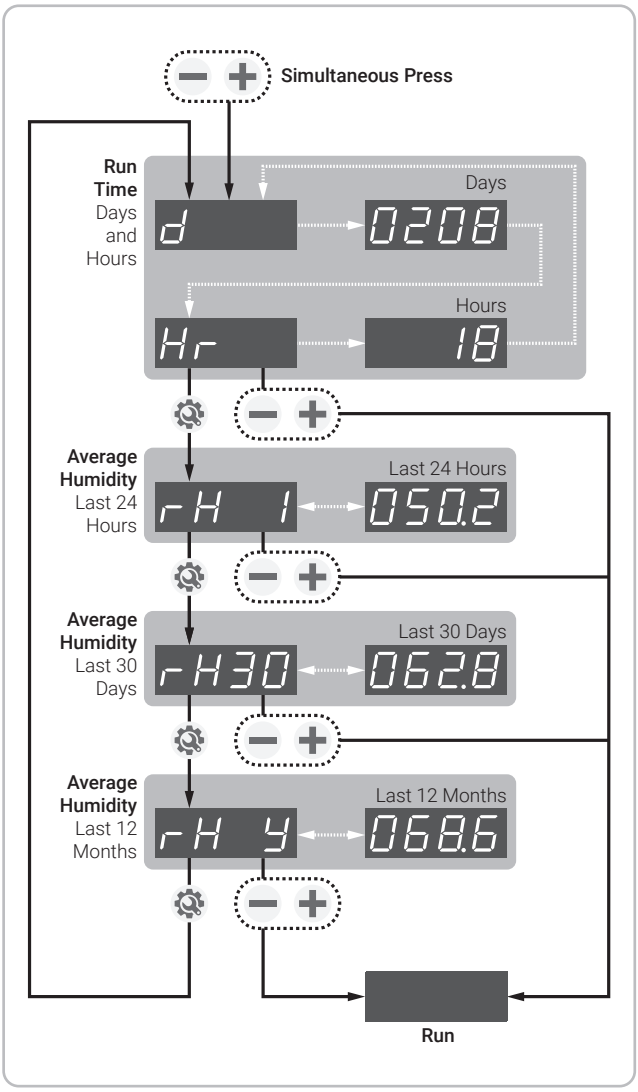

Humidity Control Suspend

The feature prevents Humidity Control from increasing the fan speed; the suspend timer can be set at up to 12 hours. Each time this feature is required use the below operation to set the suspend time. The unit will remember the previous set suspend time.

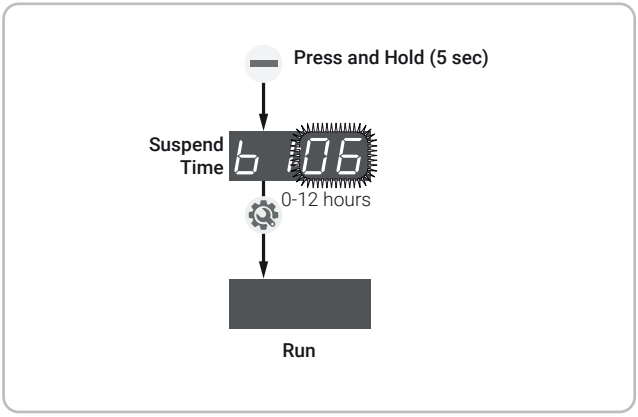

Maintenance

WARNING: The unit uses a 230V~ supply and contains rotation mechanical parts. ISOLATE the unit from mains power supply and allow sufficient time for all moving parts to stop before undergoing any Servicing or Maintenance.

Cleaning Exterior

For best results remove fascia and clean with a damp cloth with a warm mild detergent solution. Do not use solvents or abrasive cleaners.

Clean the top of the unit with a dry cloth or vacuum cleaner. Ensure flow and humidity sensor areas are cleared of all dust.

DO NOT remove the top of the unit for cleaning.

Routine maintenance

All ventilation units require periodic maintenance. Routine maintenance must only be carried out by a suitably qualified and competent person.
The Titon Ultimate® dMEV must be periodically cleaned internally.

The dMEV includes an airflow sensor which monitors the flow rate and adjusts the speed to maintain this flow

Excessive dust or other contaminants may impair the sensor's accuracy. Cleaning (e.g. Vacuum cleaner) is recommended to remove dust from the fan housing and flow sensor.

The sensor is a plug-in service replaceable part; running issues due to sensor clogging are not therefore covered under the product warranty.

Troubleshooting

Error Messages

The Display will alternately flash the messages to indicate a problem. If the fan appears to be continually running fast see Routine Maintenance.

Fault checking must be carried out by a suitably qualified and competent person

FAn ↔ FAIL	Fan fault. Check for blockage.
SEnS ↔ FAIL	Humidity sensor Fault. Service replaceable part
PSU ↔ FAIL	Power supply fault. Check fan cable connection to PCB.
HI -I ↔ FAIL	Motor current too high. Contact manufacture or its service agent

Installer Information

Installed by

In the event of any queries please contact the installer. Ensure this booklet is passed to the householder once installation & commissioning of the ventilation system is complete. This Product Manual must be kept in the Home Information Pack.

Installed by:

Important environmental information about this product.

This symbol on this unit or the package, indicates that disposal of this unit after its life-cycle could harm the environment.
Do not dispose the unit as unsorted municipal waste; it should be disposed by a specialized company for recycling. This unit should be returned to your distributor or to a local recycling service.
Respect the local environmental rules.

If any doubt contact your local authorities about waste disposal rules.

Titon®
MARKETING DIVISION
894 The Crescent, Colchester Business Park, Colchester, CO4 9YQ
Tel: +44 (0) 1206 713800 **Fax:** +44 (0) 1206 543126
Email: ventsales@titon.co.uk **Web:** www.titon.com